User Manual
Installation and Operation

SAR-DF 517

4-Band Precision Direction Finder

BECKER

Edited by:

RHOTHETA Elektronik GmbH
Unterfeldring 11
85256 Vierkirchen
Germany

Internet: http://www.rhotheta.de
EMail: email@rhotheta.de

Distributed by:

BECKER AVIONICS
10830 NW 27th Street
Miami, FL 33172
U.S.A.

Internet: http://www.beckerusa.com
EMail: info@beckerusa.com

Copyright ©2000..2002 by Rhotheta Elektronik GmbH
All rights reserved

- *Issue: [2002/01/21]*
- *Display-Unit Software Vers. [2.00 …]*

Note:

The manufacturer reserves on making modifications at any time and without previous information of the here described product.

Index

1 GENERAL INFORMATION 4
1.1 Purpose of use of the direction finder 4
1.2 Content of delivery 4
1.3 Important basic adjustments 5

2 OPERATING 5
2.1 Power-On procedure / selection of operating mode 5
2.2 General functions 6
2.3 Bearing mode (page 1 to 3) 7
2.3.1 Operating elements in bearing mode: 7
2.3.2 Display in bearing mode 8
2.3.3 Scanning mode when bearing Cospas/Sarsat signals 9
2.4 Cospas/Sarsat, analysing the binary continuous signal (page 4) 10
2.5 Edit menu (page 5) 11
2.6 Adjusting training frequencies (page 6) 12

3 ERROR MESSAGES 13

4 INSTALLATION 14
4.1 Antenna unit 14
4.2 Display unit 15
4.3 Connecting cable / Interwiring 15

5 TECHNICAL DATA 16
5.1 Electric features 16
5.2 Interface 17
5.3 Mechanical features 18

6 APPENDIX 19
6.1 Frequencies of channels on maritime band 20
6.2 Serial interface dataprotocol (short description) 21

List of figures

Selection of working mode at power on of the unit 5
General operating elements of the display unit 6
Operating elements in bearing mode 7
Display page 1 (360°bearing display) 8
Display page2 (expanded +/- 45° bearing display) 8
Display page3 (bearing display as text) 8
Scanning mode, switched to second scan-frequency (active frequency 243,000 MHz) 9
Display Cospas/Sarsat analyse (page4) 10
Display edit menu (page 5) 11
Menu of adjustable frequencies (page 6) 12
Mounting drawing of the antenna 14
Mounting hole for display 15
Connecting cable / interwiring 15
Drawing of Display 18
Drawing bearing antenna 19
Timing Serielles Datenprotokoll 22

1 General information

1.1 Purpose of use of the direction finder

This modern precision direction finder was mainly developed for professional SAR (search and rescue) purposes. It offers the possibility to bear and analyse traditional emergency frequencies in the UHF and VHF band, the general calling channel 16 of maritime radio and the common Cospas/Sarsat emergency signal. Because of its very short pulse length this signal cannot be beared reasonably by conventional direction finders.

The excellent bearing results becomes possible by our newly developed patented antenna concept (small, robust and wide-banded) and the sophisticated bearing analysing algorithms, which deliver a quick but nevertheless steady display.

The direction finder was developed for working under rough conditions as mobile uses on helicopters or vehicles..

1.2 Content of delivery

- Display unit
- Antenna unit (with Receiver and DF-controller)
- Connector set for cable (antenna ⇔ display) and power-supply.

1.3 Important basic adjustments

In order to achieve best use of the direction finder, the user is able to perform several adjustments of configuration. These adjustments can be set up in the edit-menu (display: page 5).
The most important adjustments are:

- Mounting (adjustment of hanging or standing mounting)
- External (remote) dimming of display
  Important: If using the external dimming, the limits of the external analog voltage (min./max.) have to be adjusted right in the direction finder.

Description to these points see chapter Operating/ edit menu

2 Operating

Operating the direction finder is deliberately very simple with its clearly arranged layout. Except the upper page rotary switch and the ON/OFF pushbutton the function of the operating elements depend always on the active page. All relevant adjustments can be controlled on the display.

2.1 Power-On procedure / selection of operating mode

When switching on the unit (and only then) the operating mode can be selected by the means of the PAGE-rotary switch. There is the choice between the emergency mode with fixed preselected emergency frequencies and the training mode. The training mode is characterized by freely selectable training frequencies instead of preadjusted emergency frequencies. (See also bearing mode / frequency).

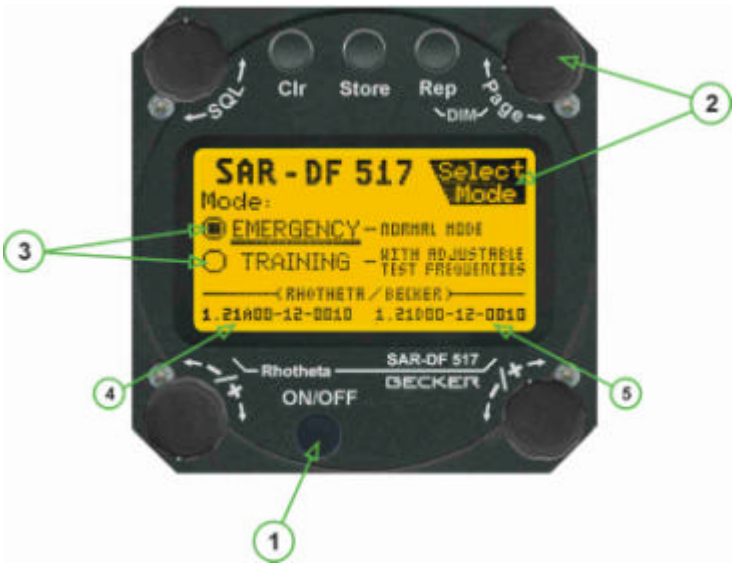

Selection of working mode at power on of the unit

(1) >**ON/OFF**< Pushbutton to switch on/off the device.

(2) >**Page / Select Mode**< rotary switch for selection of the operating mode after power-on.

(3) >**Mode**< Indication of the actual operating mode.
- Emergency: Selection of the international emergency frequencies.
- Training: free adjustable training frequencies.

(4) Version/software-no. and serial no. of Antenna-Unit

(5) Version/software no. and serial no. of Display-Unit

2.2 General functions

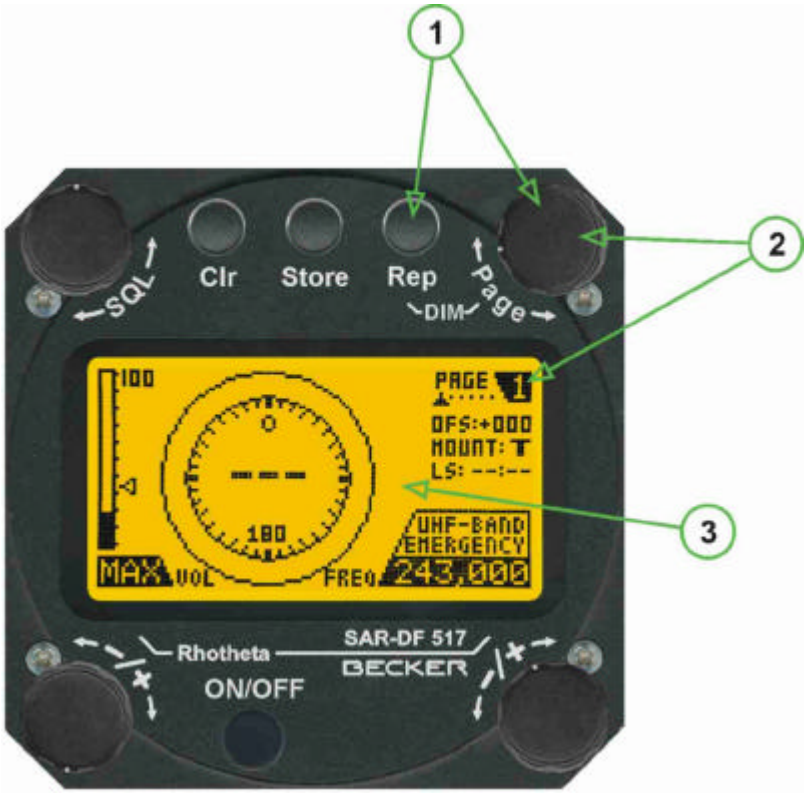

General operating elements of the display unit

(1) >**DIM**< In order to adjust "internally" the background brightness of the display and the legends press simultaneously the REP key while selecting the brightness with the PAGE rotary switch. The adjusted brightness of the display will remain stored after switching off the unit. The background of the LC-graphic display is equipped with a LED-array, whose brightness may be adjusted continuously (from 0 to 100%). Dimming will be performed in an exponential curve, thus allowing very accurate adjusting under night-conditions.

Internal dimming (on display unit):

Always active, if external dimming input not connected, or applied voltage < 1V DC. (See plan interwiring).

External (remote) dimming:

As soon as there's a voltage >1V DC at the dimming input the brightness is controlled externally by a analog signal. (See plan interwiring and operating/edit-menu).

(2) >**PAGE**< Rotary switch to select the displayed active page and its corresponding operating mode. The current page number (1 to 6) is indicated in the display top right.

(3) >**LC-graphic display**< (128x64 dots, supertwist, dark blue on yellow-green background.

2.3 Bearing mode (page 1 to 3)

On pages 1 to 3 the device works in the bearing mode. As soon as a signal is received (receiving level above squelch level) the unaveraged maximal bearing values (spread) are indicated and, if interpretable, the averaged bearing value. Having received a signal, the last bearing value is shortly shown flashing, until the internal average bearing value store is cancelled after the time-hold span (see edit-menu)..

2.3.1 Operating elements in bearing mode:

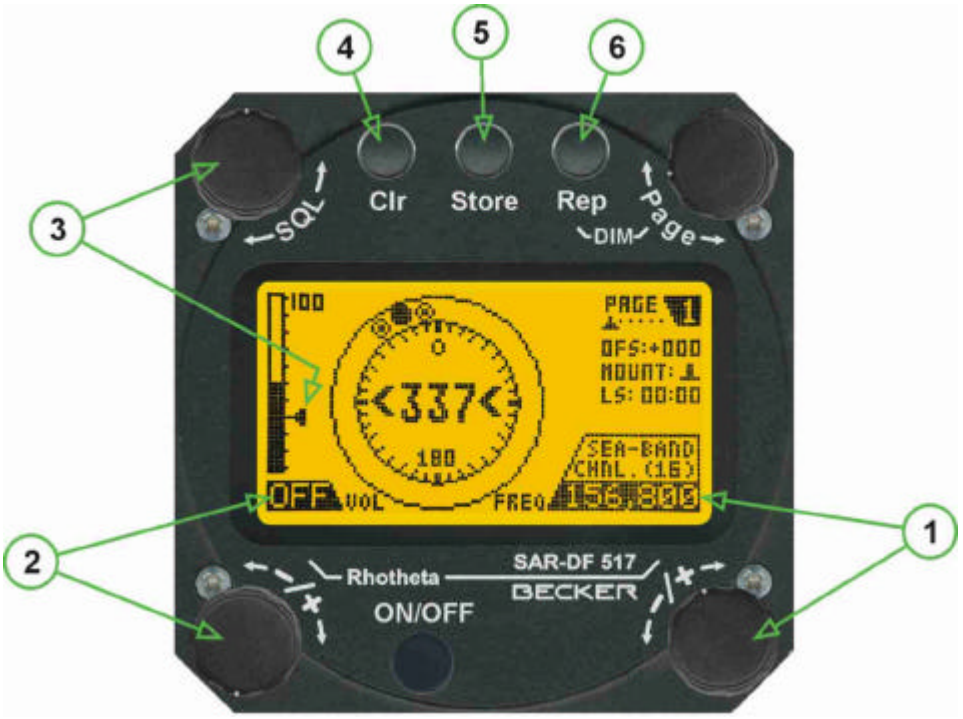

Operating elements in bearing mode

(1) >**FREQUENCY**< Rotary switch selecting the active frequency. The last selected frequency remains stored after switching off/on the device. The selected frequency is shown on the graphic display bottom right. Following the order of possible frequencies:

Mode: **Emergency** (all international emergency/distress frequencies)

156,800 Mhz (channel 16 / maritime radio) ↔ 121,500 Mhz (emergency frequency VHF) ↔ 243,000 Mhz (emergency frequency UHF) ↔ 406,025/28 Mhz (Cospas/Sarsat - Emergencyl) ↔ 406,025/28 Mhz (Scanmode: + 121,500 Mhz + 243,000 MHz)

Mode: **Training** (with free adjustable test/trainings-frequencies)

e.g. 156,525 Mhz (channel [1..28, 60..88] seastation / maritime radio) ↔ e.g. 121,650 Mhz (Testfrequency 1) ↔ e.g. 243,300 Mhz (Testfrequency 2) ↔ e.g. 406,100 Mhz (Testfrequency 3) ↔ Testfrequency 3 (Scanmode: + Testfrequency 1 + Testfrequency 2)

(2) >**VOLUME**< Rotary switch for the AF-audio exit. A linked external speaker resp. amplifier can be adjusted in a range from 0% (off) to 100% (max). The selected volume is shown in the graphic display bottom left. The volume remains stored after switching off/on the device.

(3) >**Squelch level**< Adjusts the squelch level, which has to be above the receiving level without signal (noise). For each frequency exists a squelch level, which has to be adjusted separately.

(4) >**CLR**< Pushbutton for erasing the internal bearing value averaging store. The sophisticated averaging store increases bearing precision and effects at all a usable bearing display for bad receiving signals (if there is a far away transmitter and/or temporary complete loss of a receiving signal). Caused by the averaging procedure a drag error may occur, which might be disturbing after quick changes of course. In this case the indicated bearing value lags by the real bearing value for about two seconds (for very weak signals even

longer). By pressing this pushbutton after a quick change of course the display will show the new bearing value without drag error.

(5) >**STORE**< pushbutton . While bearing an AM signal a 3 kHz sound is superimposed to the audible AF because of technical reasons. When pushing this button this disturbing sound will be switched off (enables better hearing of a signal, meanwhile bearing isn't possible anymore). A FM signal (e.g. maritime radio band) is always clearly understandable, for a filter in the device is fading-out the superimposed 3 kHz sound.

(6) >**REPEAT**< Pushbutton, when pressed, showing the last valid bearing value with corresponding receiving level.

2.3.2 Display in bearing mode

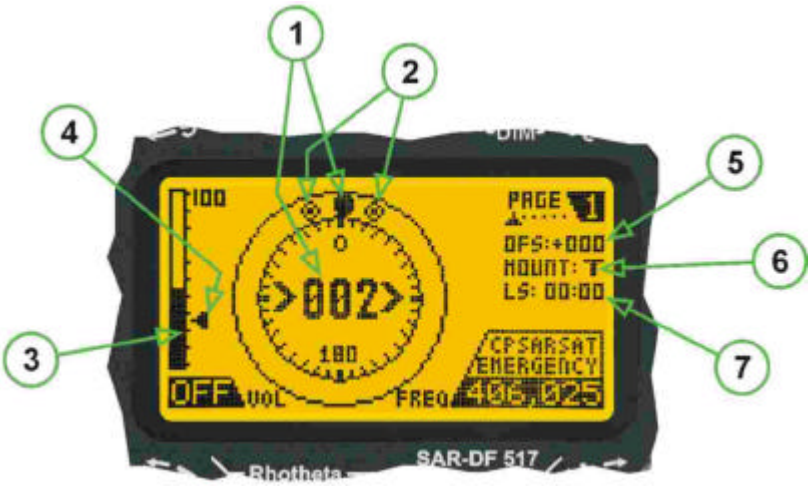

Display page 1 (360°bearing display)

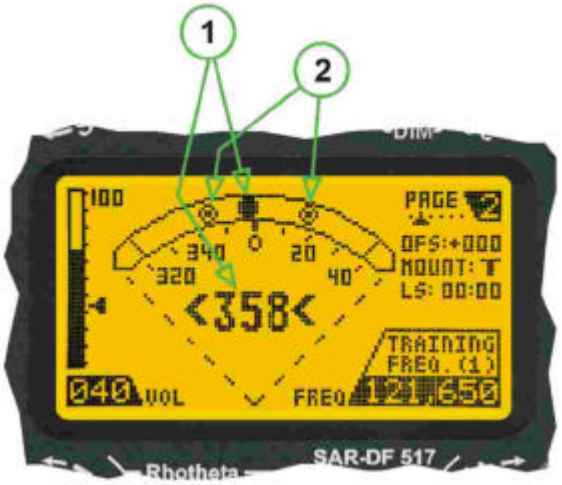

Display page2 (expanded +/- 45° bearing display)

Display page3 (bearing display as text)

(1) >**Bearing value**<, by the means of a sophisticated averaging procedure a steady display is accomplished, either as graphic display (depending on page) or as text in the range of 0°…359°. (0° corresponds to bearing direct ahead).

(2) >**Spread**<, maximum deviation of unaveraged bearing values as indicator of bearing quality. The wider the range, the worse is the received signal. The excellent averaging procedure effects even with a spread of 45° good bearing results.

(3) >**Receiving level**< (field strength) of the signal in the range of 0% to 100%. Even without a received signal a certain noise level may be displayed..

(4) >**Squelch level**< -marker (free adjustable for each frequency). A usable bearing and Cospas/Sarsat analysis can only be achieved, if the squelch level is above the noise level (without received signal). If the bearing antenna is situated near strongly disturbing electronic devices, the squelch level has to be raised, thus making the direction finder less sensitive.

(5) >**Offset**< displays the offset value (adjusted in the edit-menu).

(6) >**Mounting**< -indicator of the mounted bearing antenna. Shows the mounting arrangement of the antenna (can be adjusted in the edit-menu) as verification. (= TOP mounted, =BOTTOM mounted)

(7) >**LS: ---:---**< (last signal) internal timer, indicating the time span of the last received signal. (Display in min:sec).

2.3.3 Scanning mode when bearing Cospas/Sarsat signals

The Cospas/Sarsat signal on 406,025 MHz is transmitted only every 50 secs. (pulse length ca. 400ms). When approaching to the transmitter it will be received (because of it's transmitter power) earlier than the 121.500 MHz resp. 243.000 MHz continuous signal. However, a transmitter in the near range may be beared faster with a continuous signal. For this purpose in the scanning mode the 406 MHz pulse and, at the same time, two other emergency frequencies can be surveilled for a continuous signal. This function can be activated by switching in the time span (5 to 45 secs.) between two Cospas/Sarsat pulses to the other emergency frequencies. If there is a signal received, the frequency will be held till its end, otherwise frequency will be changed after 45 secs. to the Cospas/Sarsat frequency and it will be waited for the next pulse. The active frequency is displayed bottom right.

The scanning mode is possible with the frequencies: 406,025 MHz ⇔ (121,500 MHz and 243,000 MHz) or the respective training frequencies.

Timer > LS: --:-- always displays time span since last received CP-Sarsat pulse signal (406,025 MHz)

Frequency display in scanning mode:

Scanning mode, switched to second scan-frequency (active frequency 243,000 MHz)

2.4 Cospas/Sarsat, analysing the binary continuous signal (page 4)

Selecting this page activates automatically the active frequency on 406,025 MHz (or the respective training frequency). Correct receiving of the Cospas/Sarsat data signal (112 resp.144 data bits) displays data as follows:

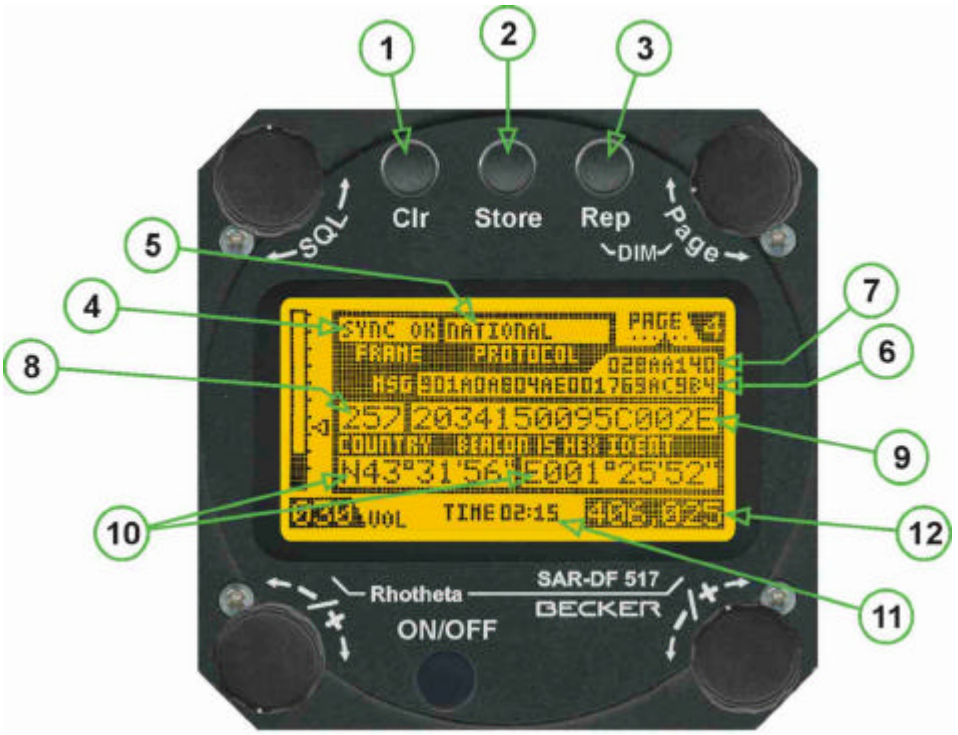

Display Cospas/Sarsat analyse (page4)

(1) >**CLR**< pushbutton. Erases present displayed massage.

(2) >**STORE**< pushbutton. Present displayed massage will be stored. An already existing stored message will be overwritten. The messages will remain stored after switching off the device.

(3) >**REP**< pushbutton. A stored message will be displayed.

(4) Frame: **SYNC OK** (normal CospasSarsat signal) or **SLFTEST** (CospasSarsat signal in auto-test mode). All 24 synchronising bits have been received correctly.

(5) Applied CP-SARSAT protocol: **USER (TEST), STANDARD (TEST)** or **NATIONAL (TEST)**

(6) First part, c**omplete Hex Message**: complete short-data signal, hexadecimally coded (bit 25...112)

(7) Second part of complete hexadecimal message (long part, bit 113...144)

(8) Country: **country identification** (numeric code).

(9) Beacon 15 hex ident: **transmitter identification** (Fifteen Hexadecimal Character Beacon Identification) for Identification of a registered transmitter.

(10) **GPS-data of position**, (data of latitude and longitude), if contained in transmitter signal. Solution between 15 minutes and 4 seconds of arc.

(11) Time: **Timer** displaying time span since last received valid CP-sarsat message.

2.5 Edit menu (page 5)

The edit menu enables you to make several adjustments. All confirmed changes remain stored even after switching off/on the device.

(1) >±**Select**< rotary switch selects the value to be changed.

(2) >±< rotary switch changing the value. Confirm the changed value by pressing pushbutton >STORE< .

(3) >**STORE**< Pushbutton to confirm changed values.

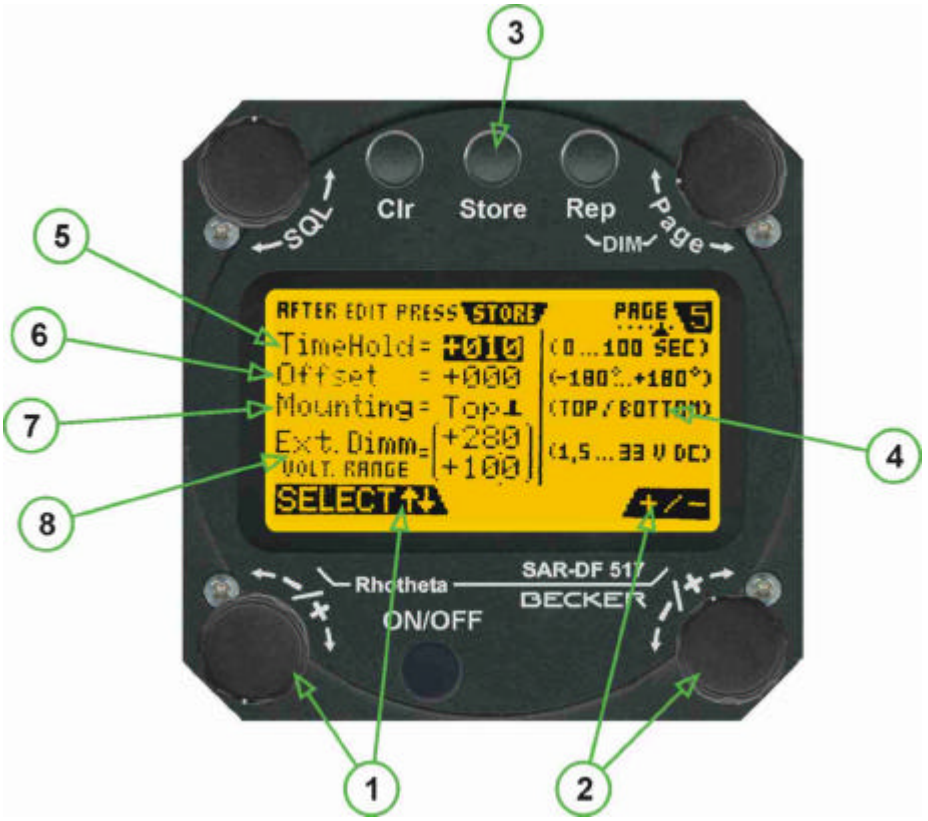

Display edit menu (page 5)

(4) **Range** of adjustable values.

(5) >**TimeHold**< Duration [sec] of internal storage of the averaged bearing value. In case that there are weak signals with signal gaps (e.g. temporary blind spots caused by rough sea) the bearing values are still summed up despite lacking signals, thus enabling a good signal analysis (normal TimeHold value: 10 = secs.).

(6) >**Offset**< electronic correction (rotation) of the bearing antenna. Adjustment delivers correspondingly changed bearing values. (normal-value = 000)

(7) >**Mounting**< Order of antenna mounting. If the antenna is mounted upside down (e.g. on bottom side of a helicopter) **Bot**tom has to be selected. If mounted on top of a vehicle, **Top** has to be selected. If > Mounting< not properly selected, the bearing value resp. display will be shown mirror inverted!

(8) >**Ext. Dim. Volt. Range**< Range of the ext. analog signal voltage, which controls the dimming of the display (here: 28.0V=100%; 10.0V= 0% of brightness). In order to cover the whole range of brightness, the minimum resp. maximum values of the dimming voltage may be adapted to the given controlling voltage (e.g. of the airplane). The values are adjustable in between min. 1,5V and max. 33V DC. (See plan interwiring)

2.6 Adjusting training frequencies (page 6)

This menu enables you to adjust the training frequencies.

(1) >±**Select**< rotary switch selecting the trainings-frequency (MHz/kHz).

(2) >±< rotary switch changing the frequency. Confirm the changed value by pressing pushbutton >STORE< .

(3) >**STORE**< Pushbutton to confirm changed values.

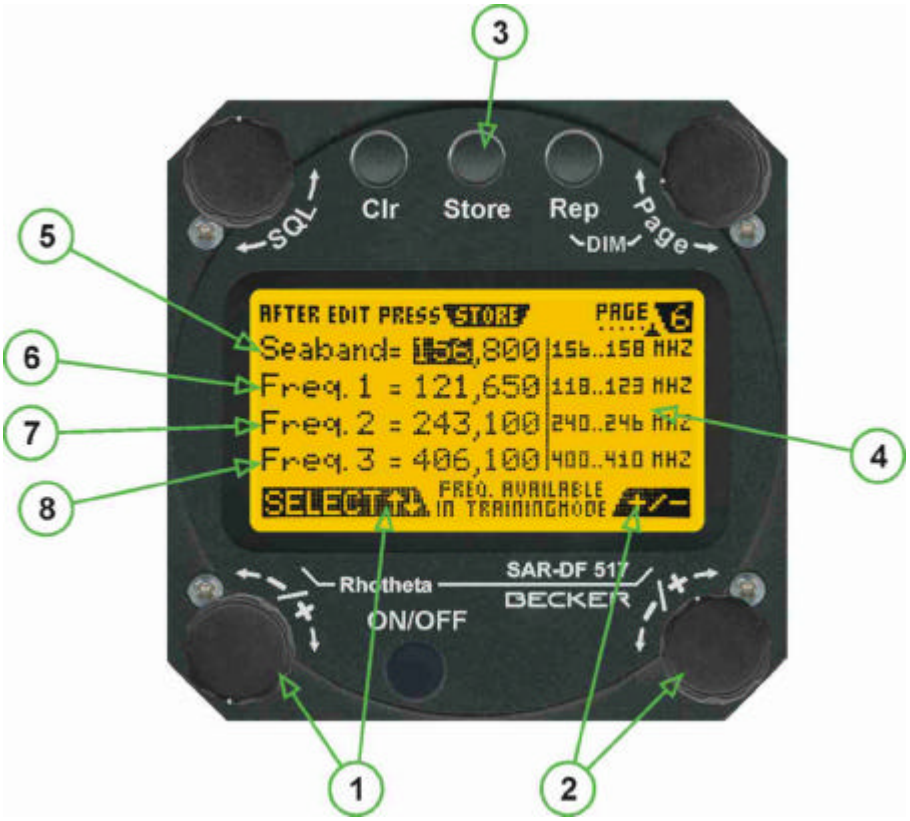

Menu of adjustable frequencies (page 6)

(4) **Range** of the adjustable frequencies.

(5) **Training frequency on maritime band:** Channel [1…28] and [60..88] of sea-station / look apendix.

(6) **training frequency 1**

(7) **training frequency 2**

(8) **training frequency 3**

3 Error messages

If an internal error of the device is recognised, a corresponding error message will be shown on the flashing display. At coincidence of various errors the error with highest priority will be displayed.

Error message	Error, location	Reason
Error 12: E12:VOLT.D	Main voltage supply	Main Voltage input too low (≤10.0V)
Error 11 E11: NO AU	Connection: antenna → display or Antenna Unit	No serial data (RS485) from Antenna Unit. No or damaged connection between antenna and display, or damaged antenna unit.
Error 10 E10:BAD AU	Connection: antenna → display	Incompatibility or bad data connection between display and antenna.
Error 9 E9: BAD RU	Remote Unit:	Incompatibility or bad data connection between display and external serial Remote Unit or PC
Error 8 E8:VOLT.AU	Antenna Unit:	Voltage supply at Antenna Unit too low (≤9.0 V). Main voltage supply too low or considerable drop of voltage between display and antenna.
Error 7 E7:BAD DCU	Connection: Display → Antenna	Incompatibility or bad data connection between antenna and display.
Error 6 E6: NO DCU	Connection: Display → Antenna	No serial data from Display Unit to Antenna Unit.
Error 5 E5:OSCILAT	antenna	error in synthesizer-oscillator of receiver in Antenna Unit.
Error 4 E4:F/+OFS+	received transmitter	Received frequency too high (more than 6 KHz / error of transmitter)
Error 3 E3:F/-OFS-	received transmitter	received frequency too low (more than 6KHZ / error of transmitter)
Error 2 E2:CS/SYNC	radio distance: transmitter ⇔ DF	Synchronising bits of Cospas/Sarsat signal (bit 1 to 24) defective
Error 1 E1: CS/BCH	radio distance: transmitter ⇔ DF	Error of data bits in Cospas/Sarsat data block PDF/BCH
Error 0 E0: NO REC	Antenna Unit: receiver	Receiver board defective

4 Installation

4.1 Antenna unit

A convenient position of the monopole bearing antenna is decisive for good bearing results. The antenna needs an effective ground connection to the body of the helicopter or to the roof of the vehicle. If no metallic mounting surface available, a metallic sheet or similar (net) with connection to ground has to be applied first between vehicle-body and antenna.

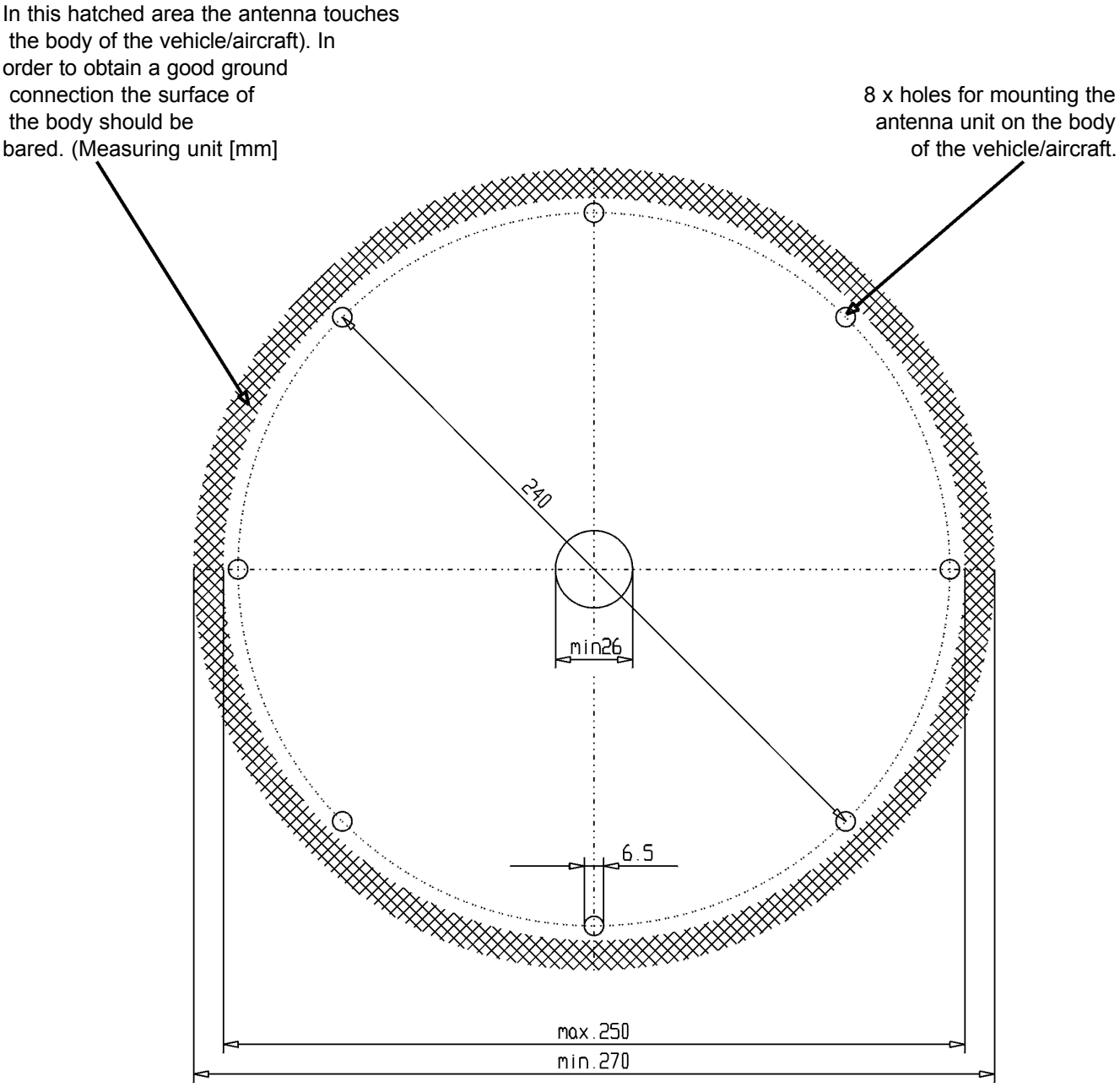

Mounting drawing of the antenna

4.2 Display unit

The display unit may be mounted into a front panel by the means of this mounting drawing:

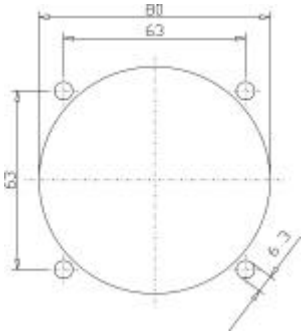

Mounting hole for display

4.3 Connecting cable / Interwiring

(Details see also chapter Technical data)

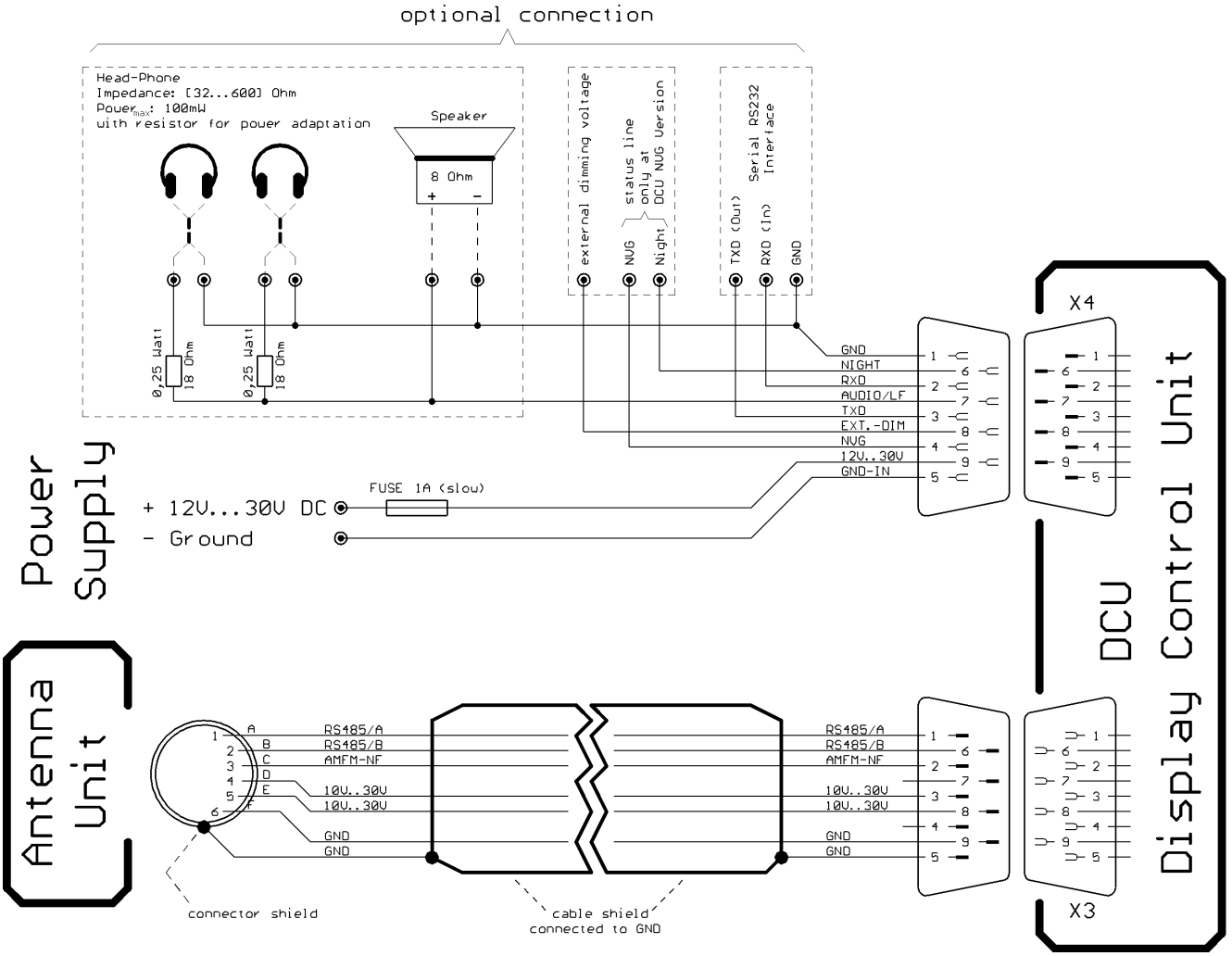

6-pol. Amphenol plug, female PTG06SE10-6S(SQ)

max. length of cable ca. 10m

9-pol. Sub-D plug (female/male)

Connecting cable / interwiring

5 Technical data

5.1 Electric features

Method of bearing:	Doppler-principle (3kHz rotational frequency, right / left rotation)	
Bearing accuracy[1]:	± 5°	
Internal resolution:	1°	
Sensitivity:	RF-Voltage at Receiver Input (50Ohms) VHF<100nV; SeaBand<100nV; UHF<100nV; 406MHz<150nV	
Frequency stability:	±2.0 ppm (? f/f=±2?10^{-6}) [at Temperature range –30°C…+80°C]	
Receiving channels:	8 (four of them are free adjustable)	
Receiving frequencies: (or see type plate for special customer options)	Emergency-Mode	Trainingsmode
	121.500 MHz (VHF)	[118.000 ... 122.975] MHz
	156.800 MHz (maritime, channel 16)	[156.000 ... 157.975] MHz
	243.000 MHz (UHF)	[240.000 ... 245.975] MHz
	406.025 MHz (Cospas/Sarsat)	[400.000 ... 409.975] MHz
Scanning mode:	When receiving Cospas/Sarsat signals additionally the emergency frequencies 121,500 MHz and 243,000 MHz can be surveilled..	
Cospas/Sarsat analysis:	Reception and analysis/decoding of Cospas/Sarsat data signal (112 resp. 144 bit, 400 baud, biphase L-phase modulated, with Bose-Chaudhuri-Hocquenghem error test / specified according Cospas/Sarsat C/S T.001 October 1999)	
Bearable kinds of modulation:	A3E, F3E, A2X (ELT-modulation); bearing largely independent of modulation.	
Polarisation:	Vertical	
Error of polarisation :	≤ 5° at 60° field vector rotation	
Garbling cone:	Ca. 30° to the vertical	
Time of response:[2]:	≤ 50 ms (with sufficient receiving field strength)	
LC-graphic display	128x64 dots, supertwist /transflective, extended range of temperature, dark-blue display on yellow-green background, lit up. Free adjustable (exponentiell) dimming of brightness	
Supply voltage range:	12 V to 35 V DC	
Current consumption:	LCD-background lighting Off: max. 350mA (12V DC) / 200mA (24V DC) LCD-background lighting 100%:max. 600mA (12V DC) / 300mA (24V DC)	

[1] *Undisturbed wave field and sufficient field strength proposed. Measuring by changing the angle of incidence , the bearing antenna rotates on a revolving table in order to eliminate influences of environment for the bearing result.*
[2] *Very weak signals can increase considerably the time of response!*

5.2 Interface

External connections (optional / at Sub-D 9pol. Connector X4 male)

Dimming:

Pin 8	external voltage for variable dimming	Analog input signal for variable controlling of the LCD-background and legends illumination. Input voltage free adjustable in the range of [1,5…33]V at edit menu (Display Control Unit Page5). Look chapter edit menu. Default setting [10…28]V. (10V=Off, 28V=max. dimming) Impedance of input > 50 kΩ
Pin 6	night status line only at SAR-DF 517 N with NVG frontpanel, otherwise don't connect.	Low-active. At input voltage < 2,5V the dimming operates in night mode. Max. of brightness ca. 2% of day/default mode Impedance of input > 50 kΩ
Pin 4	NVG status line only at SAR-DF 517 N with NVG frontpanel, otherwise don't connect.	Low-active. At input voltage < 2,5V the dimming operates in nvg mode. Max. of brightness ca. 2% of day/default mode Impedance of input > 50 kΩ

Audio/LF:

Pin 7	Audio output signal	AC coupled voltage source with very low inner resistance. Max. output voltage ca $8V_{SS}$ = $2,83V_{RMS}$ at $Volume_{Max}$. Max. output power ca. 2W with 4Ω speaker. If a headphone is connected [32…600]Ω / 100mW, we recommend using a resistor (18Ω / 0,25W) between audio output and headphone to prevent damaging the headphone.

Serial interface RS232: (9600 baud, 8 databits, 1 stoppbit, no parity)

Pin 3	Txd	Serial output (ca. ±10V)
Pin 2	Rxd	Serial input (ca. ±10V)

5.3 Mechanical features

Temperature range:

Display
- permissible operating temperature[3]: -20°C ... +60°C
- permissible storage temperature: -30°C ... +80°C

Antenna
- permissible operating temperature[3]: -40°C ... +60°C
- permissible storage temperature: -55°C ... +80°C

Protective system:
- bearing antenna: IP 67

Weights:
- display unit: 250 g
- bearing antenna: 2000 g

Dimensions:
- display unit: 82mm x 82mm x 43mm (width x height x depth)
- bearing antenna: ∅270mm x 185mm

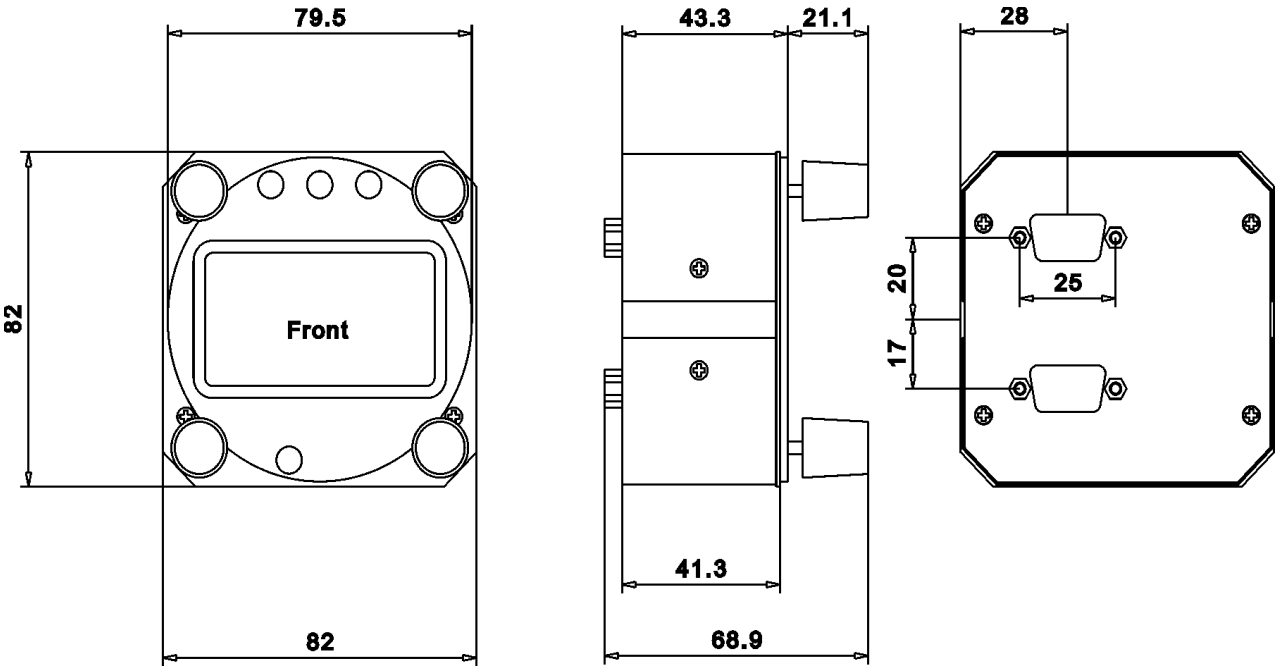

Drawing of Display

[3] *For temperatures lower than –10° C a warm-up period of 15 min should be allowed*
[3]

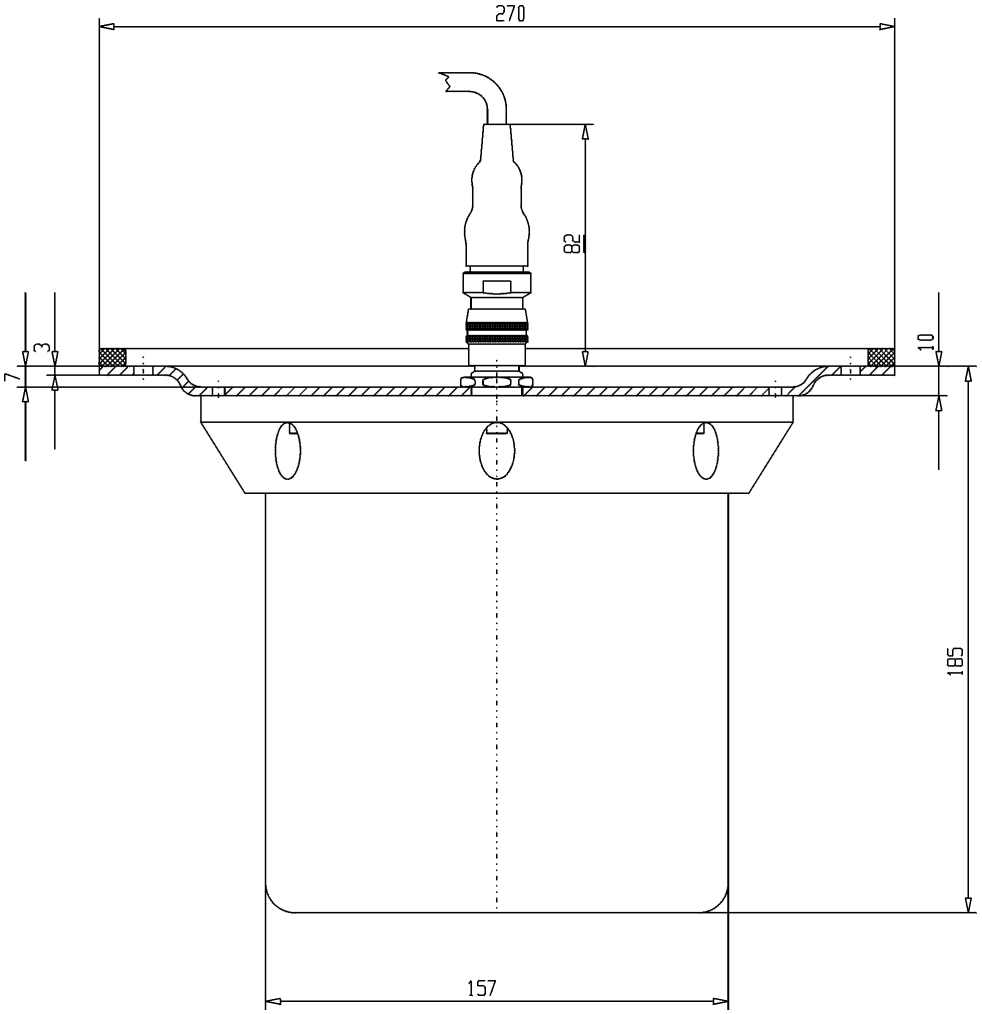

Drawing bearing antenna

6 Appendix

6.1 Frequencies of channels on maritime band

Frequency-range at SAR-DF 517 an maritime band: 156.000MHz ... 157.975MHz

Channel No.	frequency (sea - station)	Frequency (coast - station)
1	156,050 MHz	160,650 MHz
2	156,100 MHz	160,700 MHz
3	156,150 MHz	160,750 MHz
4	156,200 MHz	160,800 MHz
5	156,250 MHz	160,850 MHz
6	156,300 MHz	160,900 MHz
7	156,350 MHz	160,950 MHz
8	156,400 MHz	
9	156,450 MHz	
10	156,500 MHz	
11	156,550 MHz	
12	156,600 MHz	
13	156,650 MHz	
14	156,700 MHz	
15	156,750 MHz	
16	156,800 MHz	
17	156,850 MHz	
18	156,900 MHz	161,500 MHz
19	156,950 MHz	161,550 MHz
20	157,000 MHz	161,600 MHz
21	157,050 MHz	161,650 MHz
22	157,100 MHz	161,700 MHz
23	157,150 MHz	161,750 MHz
24	157,200 MHz	161,800 MHz
25	157,250 MHz	161,850 MHz
26	157,300 MHz	161,900 MHz
27	157,350 MHz	161,950 MHz
28	157,400 MHz	162,000 MHz
60	156,025 MHz	160,625 MHz
61	156,075 MHz	160,675 MHz
62	156,125 MHz	160,725 MHz
63	156,175 MHz	160,775 MHz
64	156,225 MHz	160,825 MHz
65	156,275 MHz	160,875 MHz
66	156,325 MHz	160,925 MHz
67	156,375 MHz	
68	156,425 MHz	
69	156,475 MHz	
70	156,525 MHz	
71	156,575 MHz	
72	156,625 MHz	
73	156,675 MHz	
74	156,725 MHz	
75	156,775 MHz	
76	156,825 MHz	
77	156,875 MHz	
78	156,925 MHz	161,525 MHz
79	156,975 MHz	161,575 MHz
80	157,025 MHz	161,625 MHz
81	157,075 MHz	161,675 MHz
82	157,125 MHz	161,725 MHz
83	157,175 MHz	161,775 MHz
84	157,225 MHz	161,825 MHz
85	157,275 MHz	161,875 MHz
86	157,325 MHz	161,925 MHz
87	157,375 MHz	161,975 MHz
88	157,425 MHz	162,025 MHz

6.2 Serial interface dataprotocol (short description)

Interface RS232: 9600 Baud, 8 databits, 1 stoppbit, no parity

Specification serial output:

byte no.	
[0]	**Header - 0xA0** Bearing Mode (normal / active at Page[1..3]) **- 0xA1** Cospas/Sarsat decoding Mode (active only at Page[4])
[1]	**Number** of bytes in the complete message (including header and checksumbyte)

↑

[2]	**Status_Ctrl** HSB **[x|x|x|x|x|x|x|x]** LSB | | | | +--> (internal use / Permission Testpage) | | | +----> (internal use / Permission RL Calibration) | | | | | +----------> Dimming External (0:Off, 1:On) | +------------> Remote Active (0:Off, 1:On) | +----------------> Squelch (1:receiving signal, 0:no signal)
[3]	**Status_Key** HSB **[x|x|x|x|x|x|x|x]** LSB | | | | | | | | | | | +--> Key [Clear] | | | | +----> Key [Store] | | | +------> Key [Repeat] | | +--------> DF-Bearing Values Clear (PS-RAM and Live-Values) | +----------> Antenna Rotation Off +------------> Filter (3kHz) Off
[4..5]	**Error** (Bits[12..0])
[6]	**Page** [0,1...6]
[7]	**Volume** [0…100]%
[8.11]	**Frequency** ([118000000…122975000],[156000000…157975000],[240000000…245975000],[400000000…409975000])Hz
[12]	**Band_Active** (0=Seaband, 1=VHF, 2=UHF, 3=CpSarsat, 4=Scanmode)
[13]	**Squelchlevel** [0…80]%
[14]	**Line_NF_Test** (internal use)
[15]	**Dimming** [0…100]%

↑ ↑

Bearing mode

[16..17]	**Voltage_DCU** ([0…335]=[0…33,5]V
[18..19]	**Voltage_AU** ([0…255]=[0…25,5]V
[20]	**Temperature_AU** [-68…+127]°C
[21..26]	(Not used / reserved)
[27]	**Level** [0…100]%
[28..29]	**Bearing Averaged** [0…359]° relative
[30..31]	**Bearing Live_Min** [0…359]° relative
[32..33]	**Bearing Live_Max** [0…359]° relative
[34..37]	(Not used / reserved)

Cospas/Sarsat Decoding

[16..33]	**18xData c**omplete message (144 bit)
[34..37]	**Time** in sec since last valid decoding

↑ ↑

[38]	**Checksum** is the 2's complement of the modulo-256 sum of all bytes without checksum-byte [0..n-1]

Specification serial input:

byte no.	
[0]	**Header 0xC0**
[1]	**Number** of bytes in the complete message (including header and checksumbyte)
[2]	**Status_Key** HSB [0|0|x|x|x|x|x|x] LSB | | | | | | | | | | | +--> Key [Clear] | | | | +----> Key [Store] | | | +------> Key [Repeat] | | +--------> DF-Bearing Values Clear (PS-RAM and Live-Values) | +----------> Antenna Rotation Off +------------> Filter (3kHz) Off
[3]	**Page** [1..6]
[4]	**Volume** [0…100]%
[5..8]	**Frequency** ([118000000…122975000],[156000000…157975000],[240000000…245975000],[400000000…409975000])Hz
[9]	**Squelchlevel** [0…80]%
[10]	**Line_Test**(internal use)
[11]	**Dimming_Internal** [0…100]%
[12]	**Checksum** is the 2's complement of the modulo-256 sum of all bytes without checksum-byte [0..n-1]

Timing:

The serial output takes place cyclic each 300 msec (without request). All available internal values are send out as a binary coded datastream.

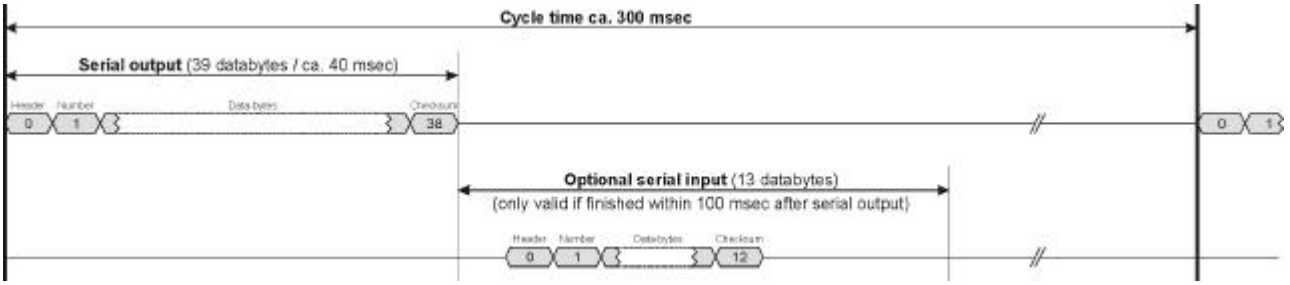

Timing Serielles Datenprotokoll

A serial input is optionaly possible. While serial input is activated, manual operation at the display control unit is blocked.